Tel 02129288511

FILTER, REGULATOR AND FILTER REGULATOR

stainless steel 316L

compact 1/4, high flow 1/4, 1/2, 3/4 and 1

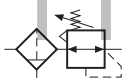

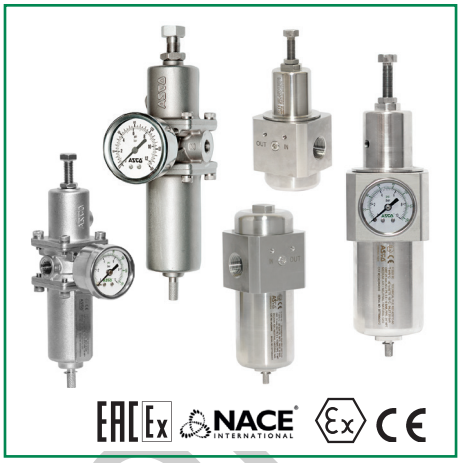

FEATURES

- *Stainless Steel Filter, Regulator and Filter Regulator intended for corrosive environment and suitable for use in potentially explosive atmosphere caused by gases, vapours, mists and / or dust according to new **ATEX** directive **2014/34/EU**.*
  SAFETY CODE:
  II 2GD IIC T100°C (T5), with 90°C ambient temperature
  II 2GD IIC T85°C (T6), with 75°C ambient temperature
  ***(ZONE 1-21)** Explosion group IIC*
- *CU-TR certified for potentially explosive atmospheres*
- *Functional Safety: IEC 61508, SIL certified*
- *Comply with the European Essential Health and Safety Requirements **(EN13643-1)***
- *All internal metal parts made of 316 / 316L stainless steel*
- *Built-in overpressure relieving function, non-relieving option available*
- *Quick Relief available [1], allowing downstream pressure in the actuator or other instrument to exhaust in the event if supply pressure is lost*
- *316L Stainless Steel body, bonnet and bowl*
- *Internal springs made of INCONEL® to suit sour gas environment complying to NACE MR0175 / ISO 15156 [2]*

[1] Available for High Flow SSFR and standalone regulator as an option
[2] Only available for High Flow SS FR as an option
INCONEL® is trademark of the Special Metals Corporation group of companies

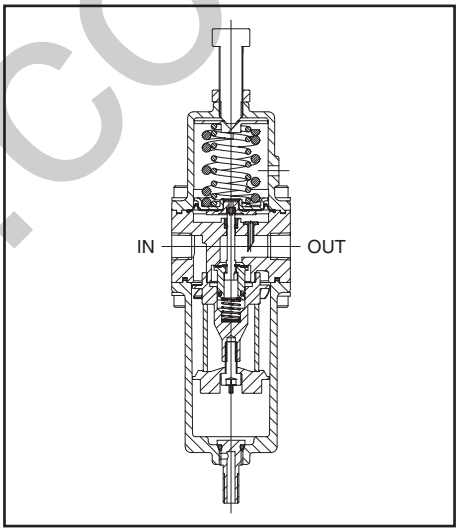

BENEFITS

- *Precise tuning and regulation - using dual spring design [3] [4]*
- *Improved regulation accuracy - with pitot tube feedback [3] [4]*
- *Longer lifespan - using rolling diaphragm*
- *Effective moisture removal - using fin diverters to create centrifugal action [3]*
- *Long lasting product labelling - laser etched marking on stainless steel bowl*

[3] Only available for High Flow 1/4 - 1/2 SS FR
[4] Only available for High Flow 3/4 - 1 SS FR

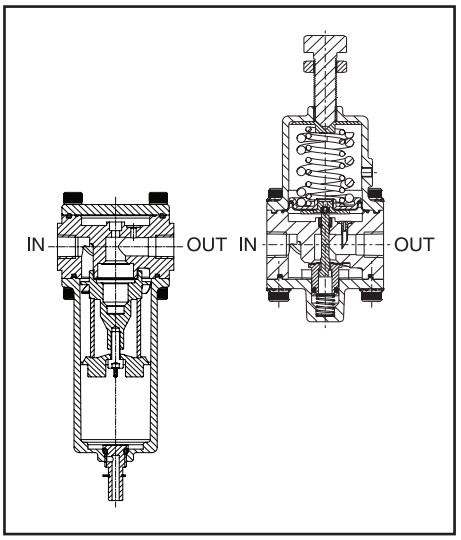

CHARACTERISTICS

	Compact	High Flow (1/4 - 1/2)	High Flow (3/4 - 1)
Fluids	Compressed air, neutral gas, natural gas	Compressed air, neutral gas, natural gas & sour natural gas	
Compliance to NACE for sour Gas environment	No	Yes (as an option)	
Quick Relief	No	Yes [5] (as an option)	
Ports	1/4	1/4 & 1/2	3/4 & 1
Threads	NPT G as an option		
Pressure range (inlet)	0 - 20 bar (Manual Drain) 2,5 - 11 bar (Auto Drain)		
Regulating pressure (outlet)	0,5 - 10 bar		
Regulation	By hexagonal head screw with nut		
Hysteresis	< 0,32 bar	< 0,2 bar	< 0,25 bar
Filtering capacity	25 µm & 5 µm		40 µm, 25 µm & 5 µm
Operating temperature [6]	-40°C to +90°C		
Low temperature option	-50°C	-60°C	-
Condensate Drain	Manual & Automatic		

[5] Available for standard temperature of -40°C to +90°C only
[6] Operating temperature for Automatic Drain: +0°C to +60°C

CONSTRUCTION

	Compact	High Flow (1/4 - 1/2)	High Flow (3/4 - 1)
Body, bonnet & bowl	AISI 316L SS		
Bowl capacity	25 cm^3	75 cm^3	160 cm^3
Filtering element	AISI 316 SS		
Diaphragm	LT FPM	HNBR	FPM
Elastomers	FPM		

hamedhp.com

PRODUCT CODE

342 A 8 0 0 1 AD

Product series
342

Revision letter
A = Initial release

F/R/FR type
8 = SS Filter Regulator (FR)
9 = Filter (F) [9]
A = Regulator (R) [9]

Pressure relief / vent hole
0 = Non relief diaphragm type [10] [11]
2 = Ø M5 thread [2]
4 = Ø 1/8 NPT [2]

Certifications & approvals
0 = ATEX 1/21
1 = ATEX 1/21 + CUTR
2 = ATEX 1/21 + NACE [9]
3 = ATEX 1/21 + NACE + CUTR [9]

Options
AD = Automatic Drain [1]
AN = Automatic Drain with 1/8 NPT connection [1]
G = 316 SS pressure gauge [2] [3] [4] [5]
K = Quick Relief [6]
LT = Loww Temperature [7] [8]
MB = 316L SS Mounting Brackets [5]
AD + AN is not a possible combination
LT + AD/AN is not a possible combination

Filtration/port size
1 = High Flow 1/4 NPT 25 µm or Regulator only
2 = High Flow 1/4 G 25 µm or Regulator only
3 = High Flow 1/2 NPT 25 µm or Regulator only
4 = High Flow 1/2 G 25 µm or Regulator only
5 = High Flow 1/4 NPT 5 µm
6 = High Flow 1/4 G 5 µm
7 = High Flow 1/2 NPT 5 µm
8 = High Flow 1/2 G 5 µm
9 = Compact Basic Flow 1/4 NPT 25 µm [12]
A = Compact Basic Flow 1/4 G 25 µm [12]
B = Compact Basic Flow 1/4 NPT 5 µm [12]
C = Compact Basic Flow 1/4 G 5 µm [12]
D = High Flow 3/4 NPT 25 µm or Regulator only
E = High Flow 3/4 G 25 µm or Regulator only
F = High Flow 1 NPT 25 µm or Regulator only
G = High Flow 1 G 25 µm or Regulator only
H = High Flow 3/4 NPT 40 µm
J = High Flow 3/4 G 40 µm
K = High Flow 1 NPT 40 µm
L = High Flow 1 G 40 µm
M = High Flow 3/4 NPT 5 µm
N = High Flow 3/4 G 5 µm
P = High Flow 1 NPT 5 µm
Q = High Flow 1 G 5 µm

(1) *Not available for Regulator*
(2) *Not available for filter*
(3) *For High Flow SSFR or Standalone Regulator, a 316 SS pressure gauge with Ø63mm dial and 1/4" NPT gauge port will be delivered*
(4) *For Compact SSFR, a 316 SS pressure gauge with Ø50mm dial and 1/8" NPT gauge port will be delivered*
(5) *Not mounted onto the product. Separate packaging.*
(6) *Available for High-Flow SSFR and standalone regulator only*
(7) *For High-Flow 1/4" - 1/2" SSFR or Compact SSFR with pressure gauge, a special low temperature 316 SS pressure gauge will be delivered*
(8) *Not available for High-Flow 3/4" - 1" SSFR, standalone filter and regulator*
(9) *Not available for Compact version*
(10) *Default "0" for standalone filter option.*
(11) *Bonnet with Ø 1/8" NPT thread*
(12) *Only available in Filter regulator. No standalone filter or regulator.*

NOTES:
- *Please refer to our online configurator for option combinations availability*
- *40 µm, 25 µm & 5 µm filtration are not applicable for standalone regulator*
- *1/8" port size for compact SSFR is also available upon request*
- *Standard regulating pressure is 0,5 - 10 bar. 0,5 - 2,5 bar is also available upon request*

ORDERING EXAMPLE

1. Compact low temperature stainless steel Filter Regulator (1/4 NPT, 25 µm filtration) with low temperature pressure gauge & mounting bracket
   • Product Code: 342A8209GLTMB
2. High-Flow stainless steel Filter Regulator (1/4 NPT, 25 µm filtration) with Auto Drain, pressure gauge & mounting bracket
   • Product Code: 342A8201ADGMB
3. High-Flow stainless steel Filter Regulator (3/4 NPT, 25 µm filtration) with Auto Drain, pressure gauge & mounting bracket
   • Product Code: 342A820DADGMB

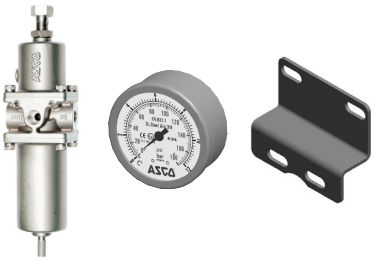

hamedhi.com

80435GB-2018/R01

MAXIMUM FLOW VALUES

Construction Type	Maximum Flow Values Following ISO Standards 5782, 6358 and 6953	Compact		High Flow (1/4 - 1/2)				High Flow (3/4 - 1)					
		l/min (ANR)											
		1/4 NPT		1/4 NPT		1/2 NPT		3/4 NPT			1 NPT		
		5 µm	25 µm	5 µm	25 µm	5 µm	25 µm	5 µm	25 µm	40 µm	5 µm	25 µm	40 µm
Filter	Inlet pressure = 6,3 bar and ΔP = 1 bar	-	-	1780	2600	1800	3300	2200	3900	5100	2350	4200	5500
Regulator	Inlet pressure = 10 bar, setpoint = 6,3 bar and ΔP = 1 bar	-	-	3120		7800		9150			10200		
Filter Regulator	Inlet pressure = 10 bar, setpoint = 6,3 bar and ΔP = 1 bar	1280	1400	2380	2450	3920	4430	4550	7500	8500	5000	7750	9500

AUTO DRAIN

	COMPACT SS FR	HIGH FLOW SSFR (1/4 - 1/2)	HIGH FLOW SSFR (3/4 - 1)
Maximum inlet pressure	11 bar		
Operating pressure	2,5 - 11 bar		
Operating temperature	0°C to +60°C		
Metal parts	316L SS		
Elastomers	FPM		
Float material	Rigid Polyurethane	PP material	Rigid Polyurethane
Adaptor (316 SS) for 1/8 NPT conversion "AN" as option			

PRESSURE GAUGE

	COMPACT SS FR	HIGH FLOW SSFR (1/4 - 1/2)	HIGH FLOW SSFR (3/4 - 1)
Pressure	0 - 10 bar	0 - 12 bar	
Diameter	Ø 50 mm	Ø 63 mm	
Gauge port size	1/8 NPT	1/4 NPT	
Material	316 Stainless Steel		
Protection	IP65; Safety glass; Fixed crimped case to avoid accidental dismounting		
Kit number	C325937	C325316	
Kit number (for Low Temp)	C325938	C325667	-

MOUNTING BRACKET

	COMPACT SS FR	HIGH FLOW SSFR (1/4 - 1/2)	HIGH FLOW SSFR (3/4 - 1)
Material	316L Stainless Steel		
Kit number	C117877	C117813	

Option	Weight (kg)
Auto Drain	0,015
Adapter for Auto Drain	0,020
Pressure Gauge	0,164
Mounting Bracket	0,079

INSTALLATION

- Installation/Maintenance instructions are included with each Filter/Regulator
- Air flow direction indicated by IN/OUT as well as inlet & outlet indicators
- Pipe connection has standard thread according to NPT (ANSI 1.20.3)

hanedhp.com

DIMENSIONS(mm), WEIGHT(kg)

FILTER

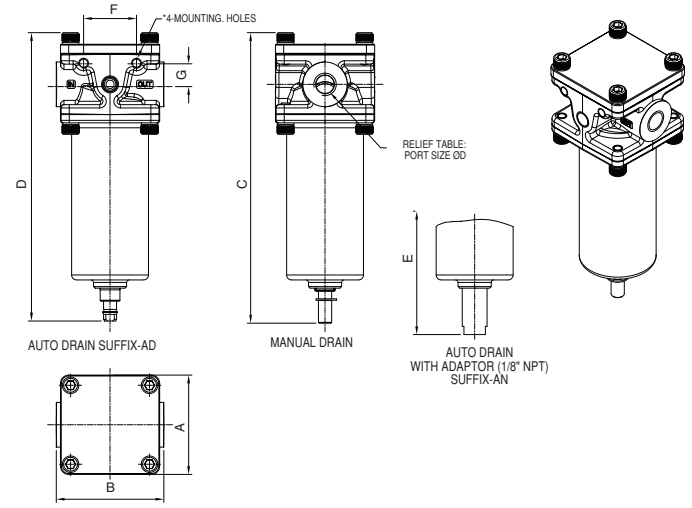

REGULATOR

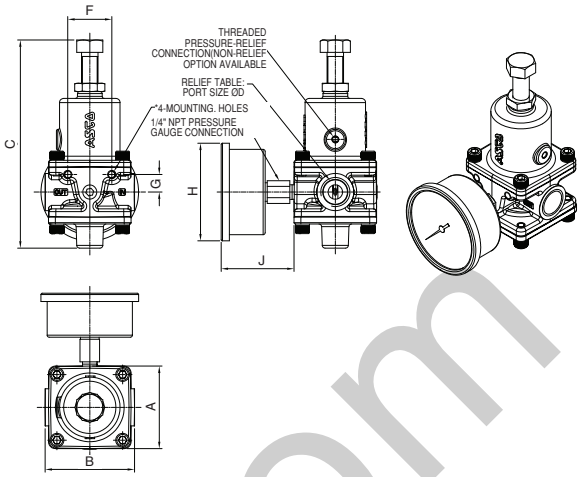

FILTER REGULATOR

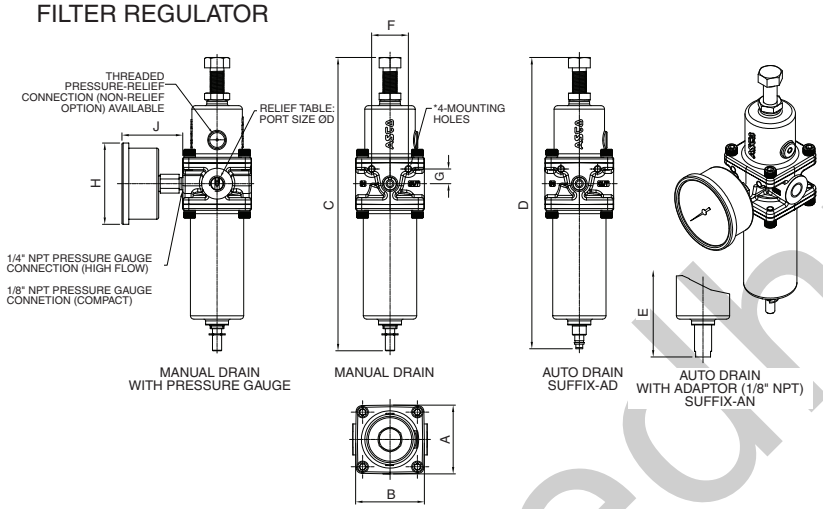

MOUNTING BRACKET

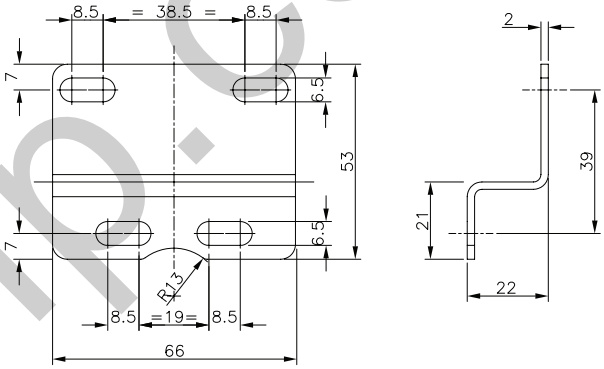

** Note: Mounting hole size M6 for High-Flow 1/4, 1/2, 3/4 & 1 SS FR and mounting hole size M5 for Compact SS FR*

DIMENSIONS(mm), WEIGHT(kg)

	Type	ØD / NPT	Weight (kg)	A	B	C	D	E	F	G	H	J
COMPACT	Filter Regulator	1/4	1,0	45	45	185	223	233	20	10	Ø58	53
HIGH FLOW	Filter	1/4	0,7	60	65	177	175	183	32	12,75	-	-
		1/2										
		3/4	5,0	85	90	242	240	250	32	21	-	-
		1										
	Regulator	1/4	1,2	60	65	151,3	-	-	32	12,75	Ø71	51
		1/2										
		3/4	4,5	85	90	230	-	-	32	21	Ø71	52
		1										
	Filter Regulator	1/4	2,0	60	65	256	254	261	32	12,75	Ø71	51
		1/2										
		3/4	6,0	85	90	329	327	337	32	21	Ø71	52
		1										

SPARE PARTS KITS

	Type	Filtering Capacity	Spare Parts Kit Number Standard	Spare Parts Kit Number Low Temp
COMPACT				
1/4	Filter Regulator	25 µm	C325921	C325996
		5 µm	C325922	C325997
HIGH FLOW				
1/4 - 1/2	Filter	25 µm	C325309	
		5 µm	C325310	
	Regulator	-	C325311	C325993
	Filter Regulator	25 µm	C325305	C325994
		5 µm	C325307	C325995
3/4 - 1	Filter	40 µm	C326171	-
		25 µm	C326172	-
		5 µm	C326173	-
	Regulator	-	C326174	-
	Filter Regulator	40 µm	C326176	-
		25 µm	C326177	-
		5 µm	C326178	-

hanmechp.com

80435GB-2018/R01

PRESSURE DROP vs. AIR FLOW CURVES

High Flow St. steel filter 1/2" NPT Ref. : 342A9007
Filtration 5 µm with P inlet 4 - 6.3 - 8 - 10 bar

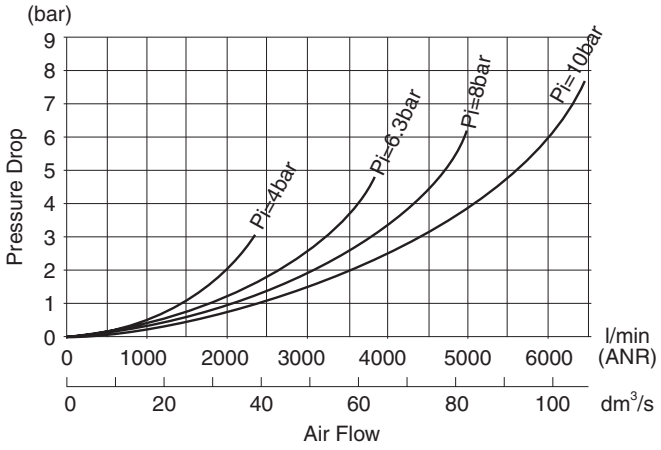

High Flow St. steel filter 1/2" NPT Ref. : 342A9003
Filtration 25 µm with P inlet 4 - 6.3 - 8 - 10 bar

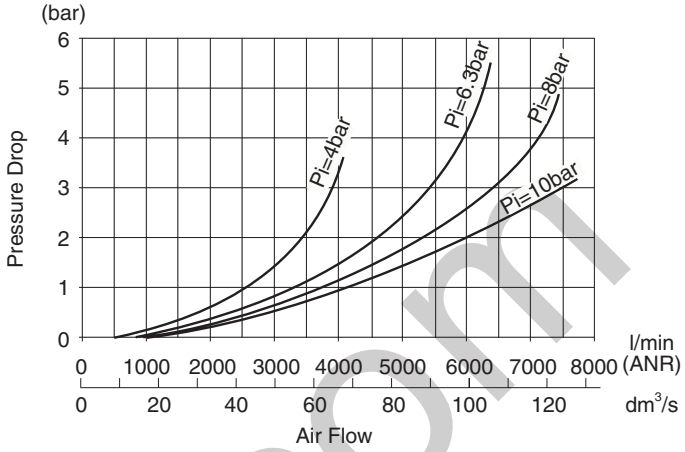

High Flow St. steel filter 1/4" NPT Ref. : 342A9005
Filtration 5 µm with P inlet 4 - 6.3 - 8 - 10 bar

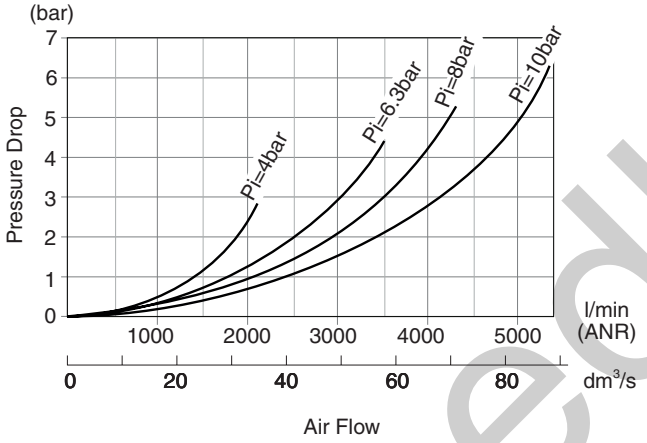

High Flow St. steel filter 1/4" NPT Ref. : 342A9001
Filtration 25 µm with P inlet 4 - 6.3 - 8 - 10 bar

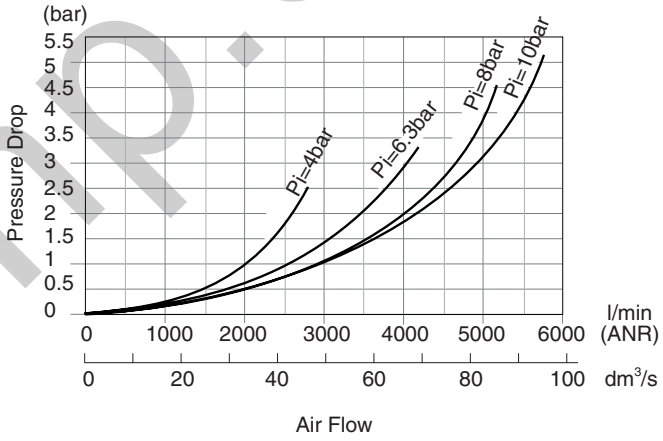

High Flow St. steel filter 3/4" NPT Ref. : 342A920M
Filtration 5 µm with P inlet 4 - 6.3 - 8 - 10 bar

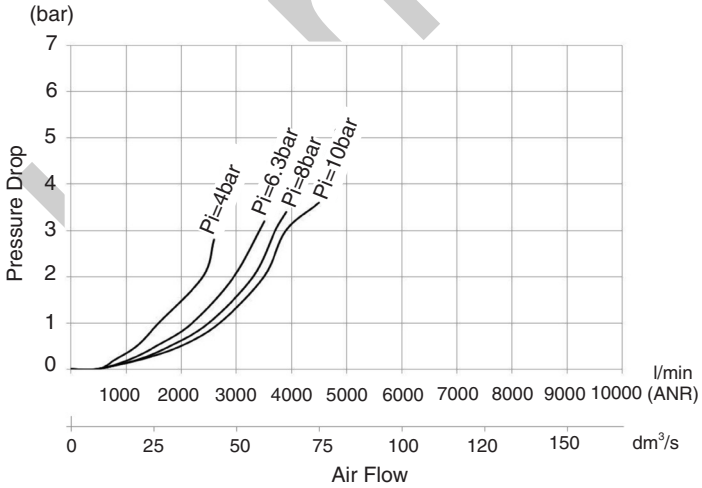

High Flow St. steel filter 3/4" NPT Ref. : 342A920D
Filtration 25 µm with P inlet 4 - 6.3 - 8 - 10 bar

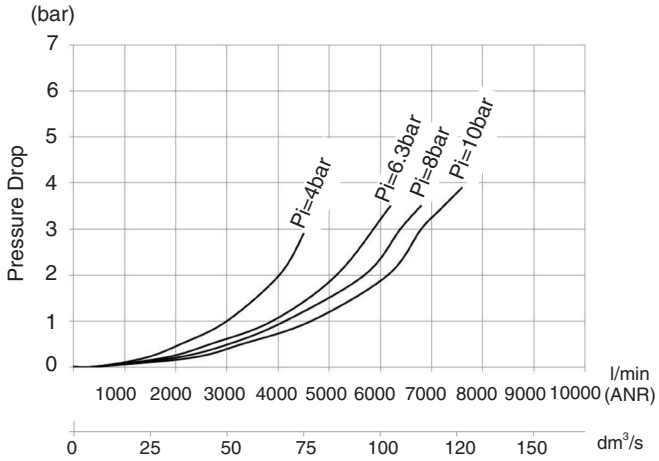

medhp.com

PRESSURE DROP vs. AIR FLOW CURVES

High Flow St. steel filter 3/4" NPT Ref. : 342A920H
Filtration 40 µm with P inlet 4 - 6.3 - 8 - 10 bar

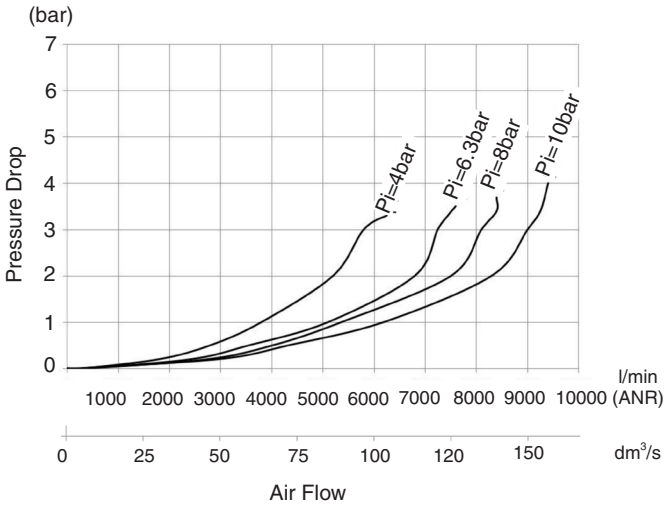

High Flow St. steel filter 1" NPT Ref. : 342A920P
Filtration 5 µm with P inlet 4 - 6.3 - 8 - 10 bar

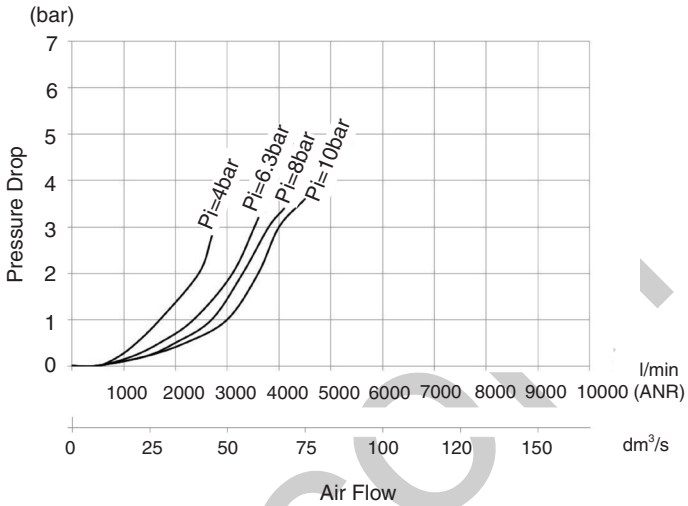

High Flow St. steel filter 1" NPT Ref. : 342A920F
Filtration 25 µm with P inlet 4 - 6.3 - 8 - 10 bar

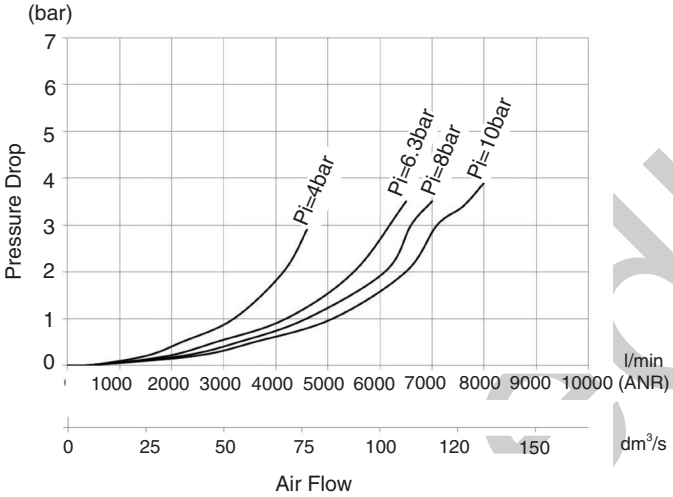

High Flow St. steel filter 1" NPT Ref. : 342A920K
Filtration 40 µm with P inlet 4 - 6.3 - 8 - 10 bar

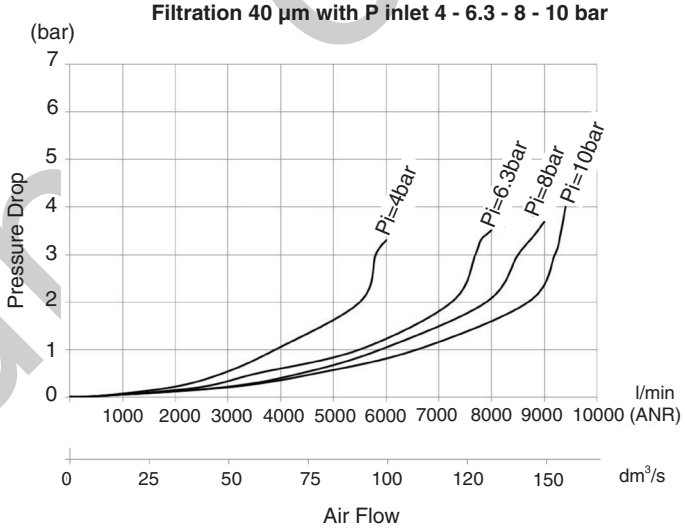

High Flow St. steel regulator 1/2" NPT Ref. : 342AA403
P inlet 10 b - setpoint 4 - 6.3 - 8 bar

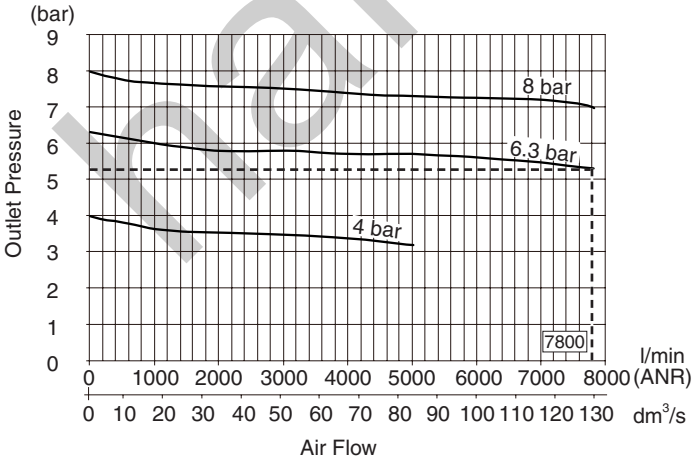

High Flow St. steel regulator 1/4" NPT Ref. : 342AA401
P inlet 10 b - setpoint 4 - 6.3 - 8 bar

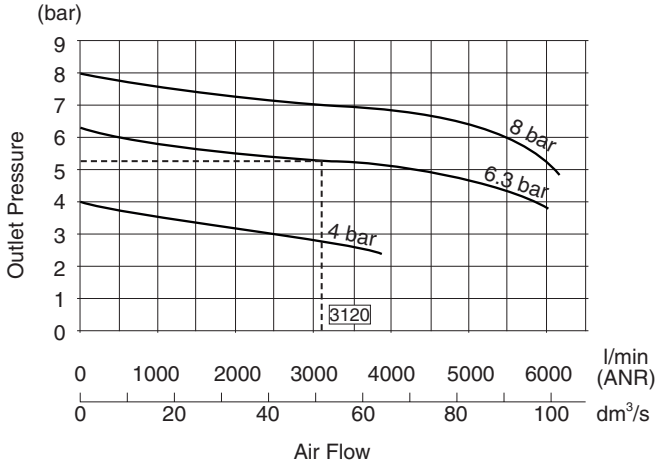

80435GB-2018/R01

PRESSURE DROP vs. AIR FLOW CURVES

High Flow St. steel regulator 3/4" NPT Ref. : 342AA20D
P inlet 10 b - setpoint 3.15 - 5 - 6.3 bar

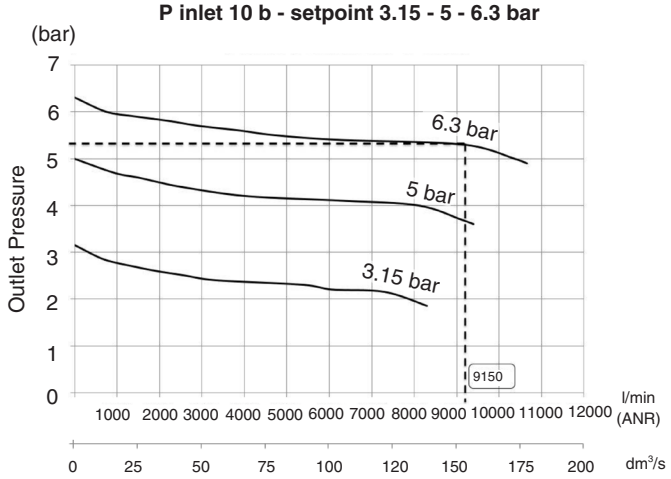

High Flow St. steel regulator 1" NPT Ref. : 342AA20F
P inlet 10 b - setpoint 3.15 - 5 - 6.3 bar

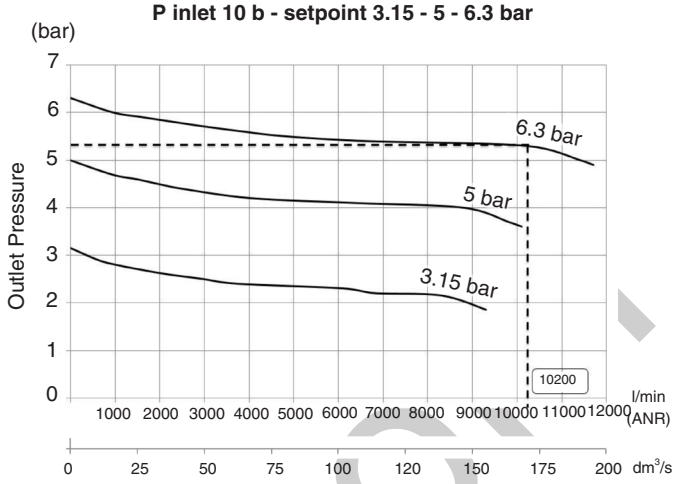

High Flow St. steel filter regulator 1/2" NPT Ref : 342A8203
Filtration 25 µm with P inlet 10 b - setpoint 3.15 - 5 - 6.3 bar

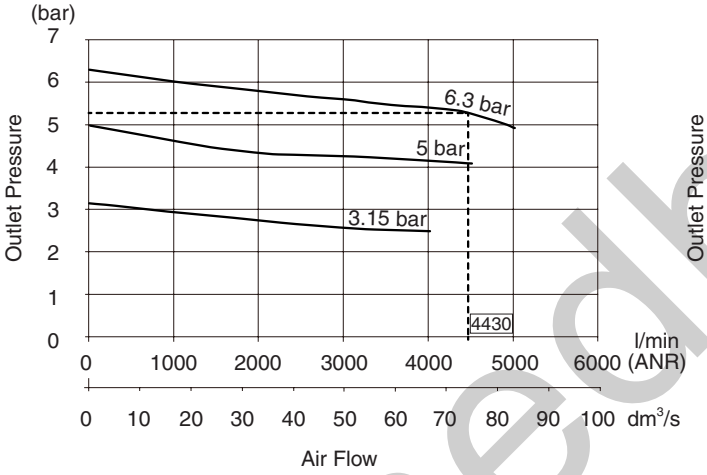

High Flow St. steel filter regulator 1/4" NPT Ref. : 342A8201
Filtration 25 µm with P inlet 10 b - setpoint 3.15 - 5 - 6.3 bar

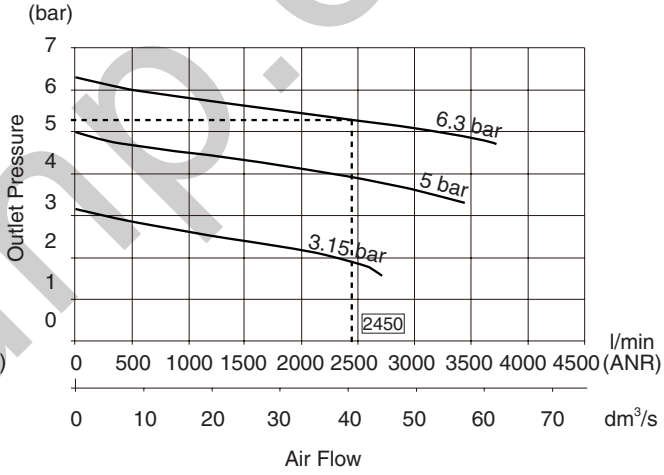

High Flow St. steel filter regulator 1/2" NPT Ref : 342A8207
Filtration 5 µm with P inlet 10 b - setpoint 3.15 - 5 - 6.3 bar

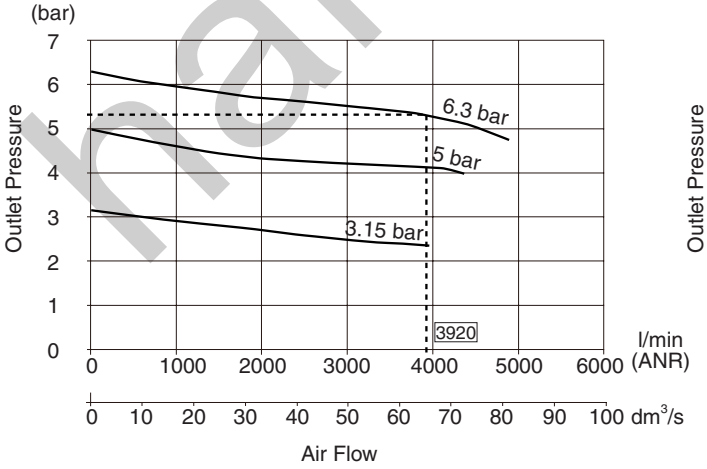

High Flow St. steel filter regulator 1/4" NPT Ref. : 342A8205
Filtration 5 µm with P inlet 10 b - setpoint 3.15 - 5 - 6.3 bar

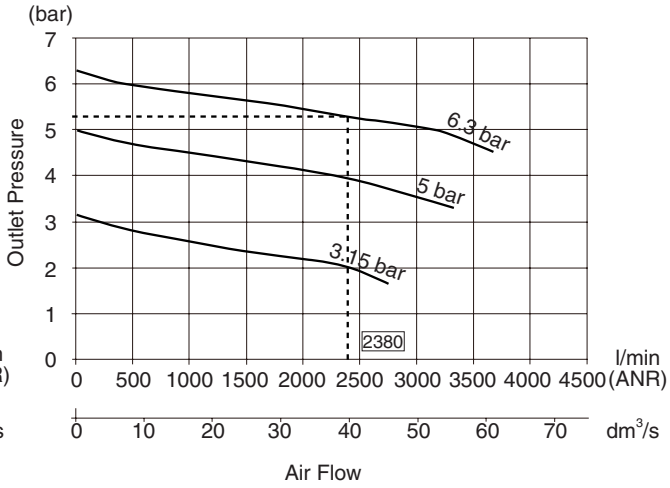

hamedhp.com

PRESSURE DROP vs. AIR FLOW CURVES

Compact St. steel filter regulator 1/4" NPT Ref : 342A820B
Filtration 5 µm with P inlet 10 b - setpoint 3.15 - 5 - 6.3 bar

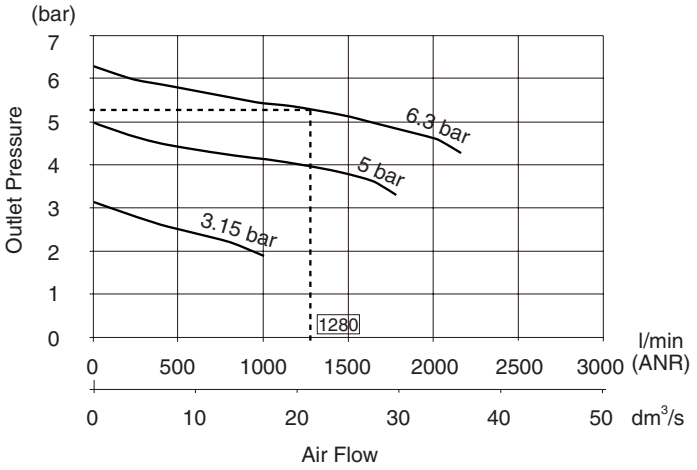

Compact St. steel filter regulator 1/4" NPT Ref. : 342A8209
Filtration 25 µm with P inlet 10 b - setpoint 3.15 - 5 - 6.3 bar

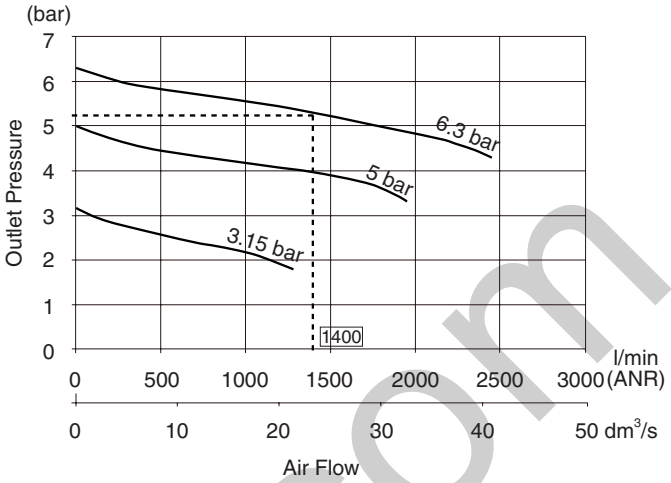

High Flow St. steel filter regulator 1" NPT Ref : 342A820K
Filtration 40 µm P inlet 10 b - setpoint 3.15 - 5 - 6.3 bar

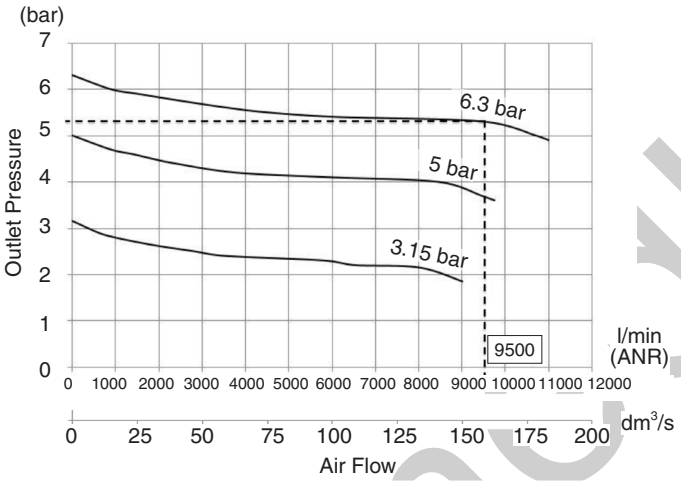

High Flow St. steel filter regulator 1" NPT Ref : 342A820F
Filtration 25 µm P inlet 10 b - setpoint 3.15 - 5 - 6.3 bar

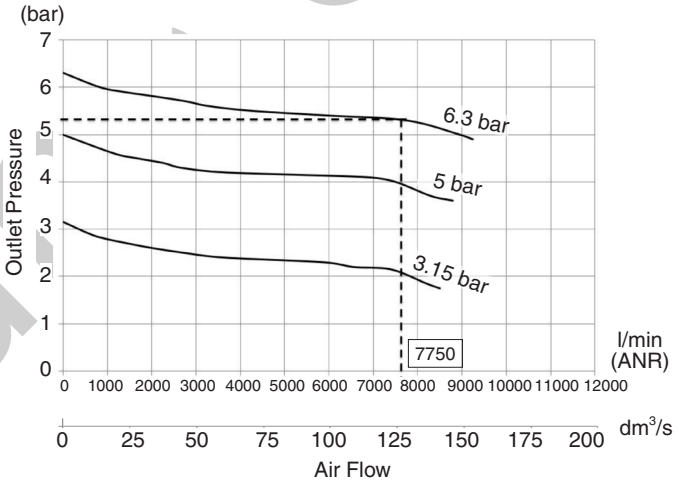

High Flow St. steel filter regulator 1" NPT Ref : 342A820P
Filtration 5 µm P inlet 10 b - setpoint 3.15 - 5 - 6.3 bar

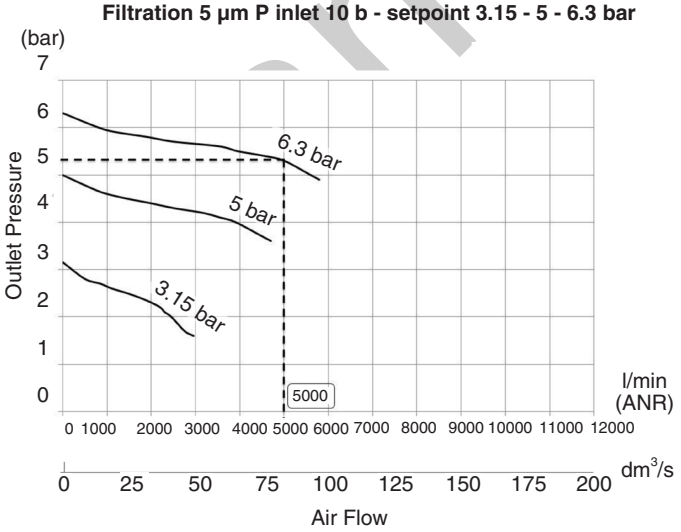

High Flow St. steel filter regulator 3/4" NPT Ref : 342A820H
Filtration 40 µm P inlet 10 b - setpoint 3.15 - 5 - 6.3 bar

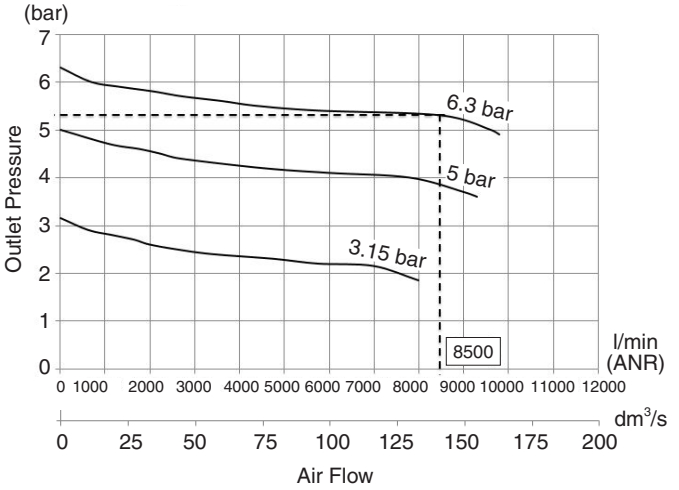

80435GB-2018/R01

PRESSURE DROP vs. AIR FLOW CURVES

High Flow St. steel filter regulator 3/4" NPT Ref : 342A820D
Filtration 25 µm P inlet 10 b - setpoint 3.15 - 5 - 6.3 bar

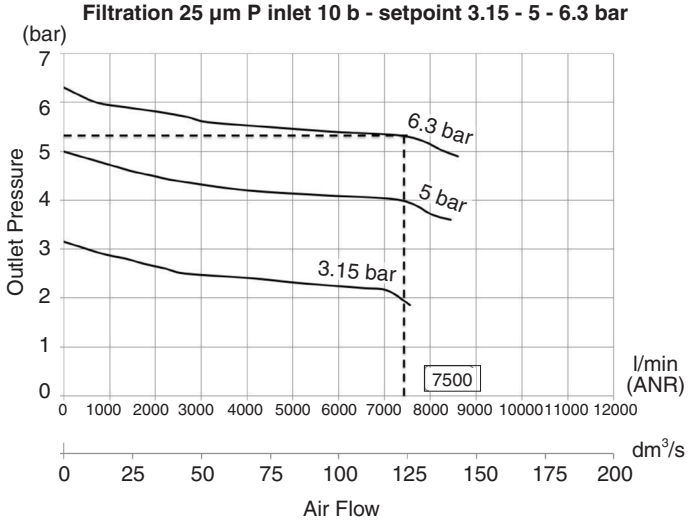

High Flow St. steel filter regulator 3/4" NPT Ref : 342A820M
Filtration 5 µm P inlet 10 b - setpoint 3.15 - 5 - 6.3 bar

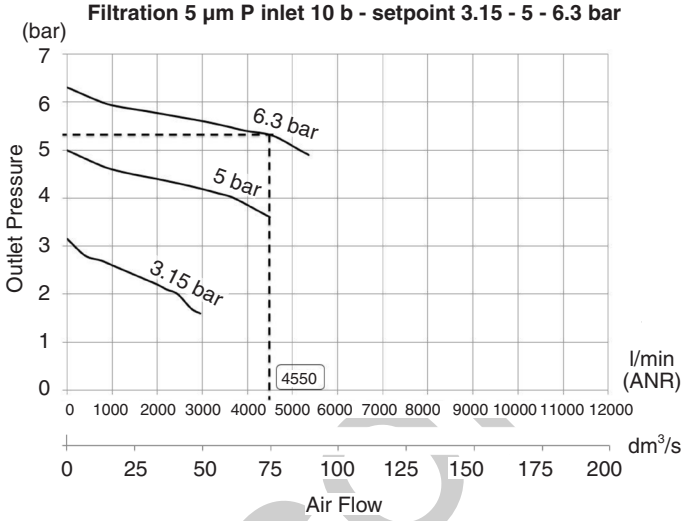

hamedhp.com

hamedhp.com

PIC-14-0016-GB -- Availability, design and specifications are subject to change without notice. All rights reserved.
80435GB-2018/R01